# JUMPER CABLE-COLOR CODING

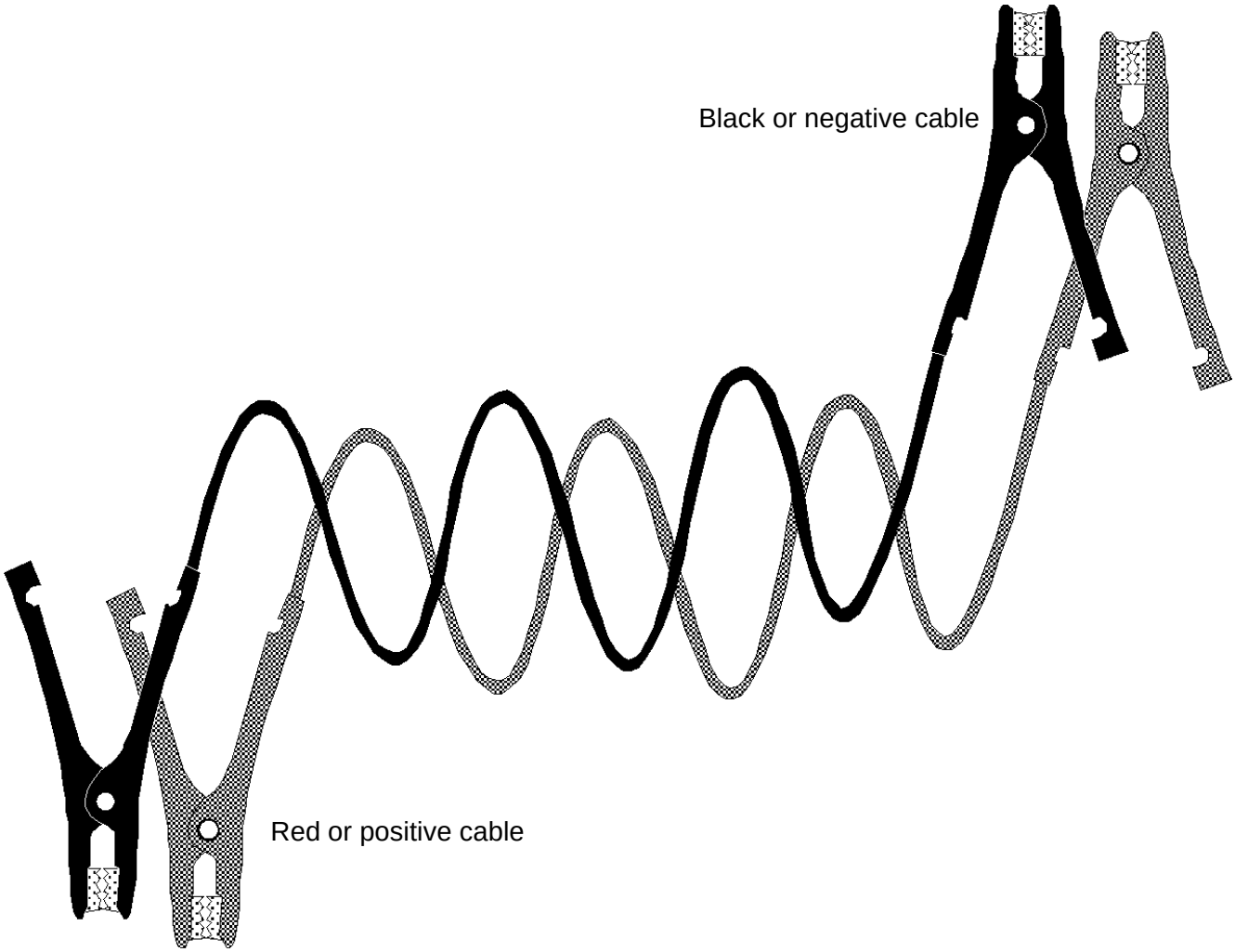

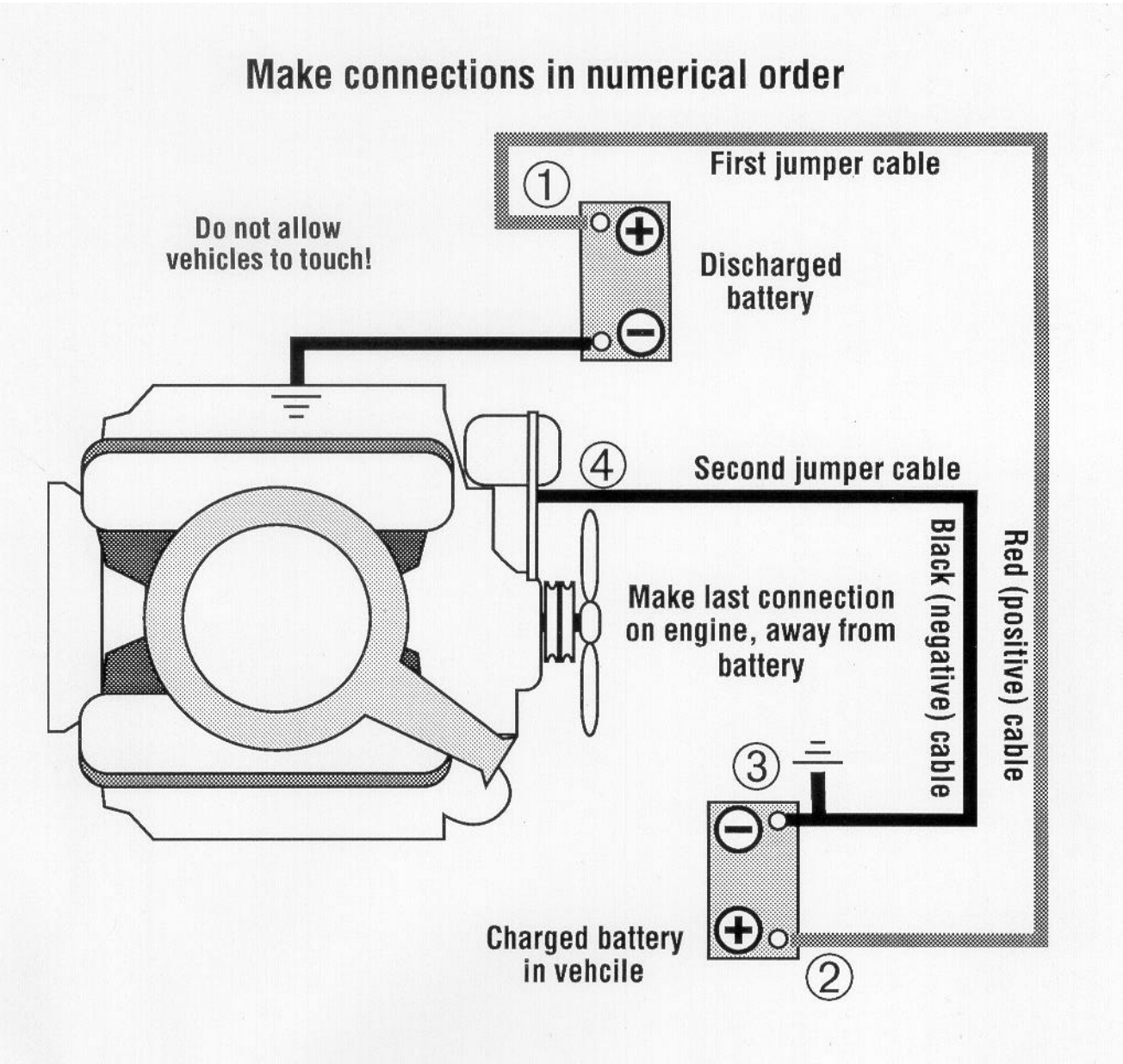
Make connections in numerical order
First jumper cable
①
Do not allow vehicles to touch!
Discharged battery
④
Second jumper cable
Black (negative) cable
Red (positive) cable
Make last connection on engine, away from battery
③
Charged battery in vehcile
②